5. Oil Pan and Strainer

A: REMOVAL

1) Set the vehicle on a lift.
2) Remove the front wheels.
3) Disconnect the ground cable from the battery.

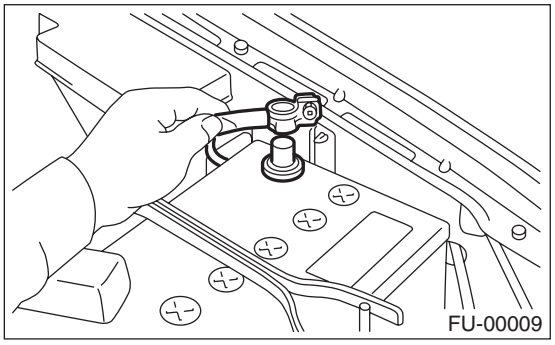

4) Disconnect the connector from the mass air flow and intake air temperature sensor.

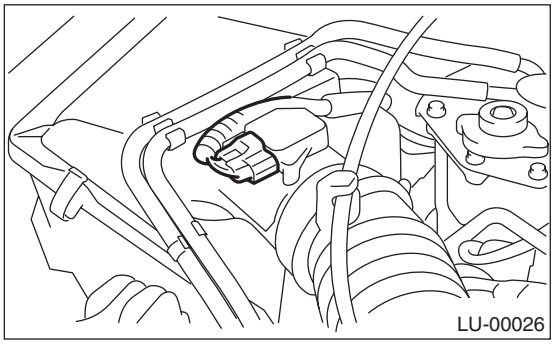

5) Remove the air intake boot and air cleaner upper cover.

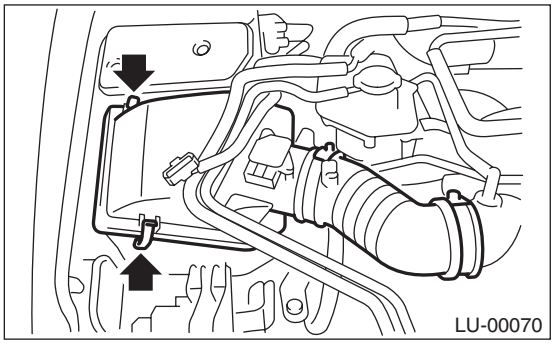

6) Remove the intercooler.
<Ref. to IN(H4DOTC)-13, REMOVAL, Intercooler.>

7) Remove the pitching stopper.

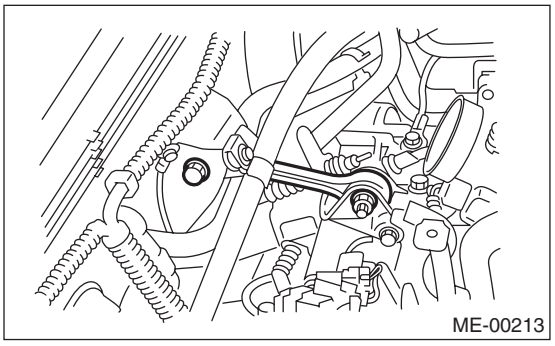

8) Remove the radiator upper brackets.

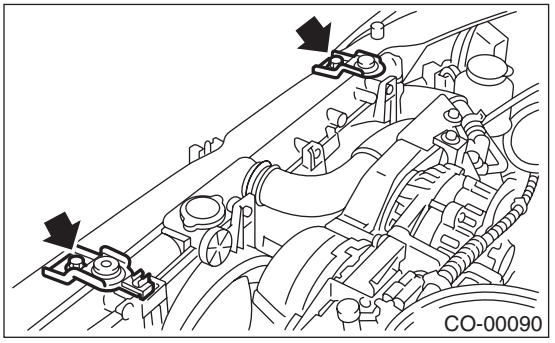

9) Support the engine with a lifting device and wire ropes.

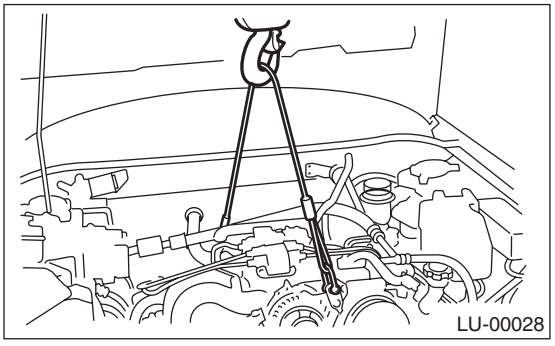

10) Lift up the vehicle.

CAUTION:
When lifting up the vehicle, raise up wire ropes at the same time.

11) Remove the under cover.
12) Drain the engine oil. <Ref. to LU(H4DOTC)-10, REPLACEMENT, Engine Oil.>
13) Remove the front exhaust pipe. <Ref. to EX(H4DOTC)-8, REMOVAL, Front Exhaust Pipe.>

14) Remove the nuts which install front cushion rubber onto front crossmember.

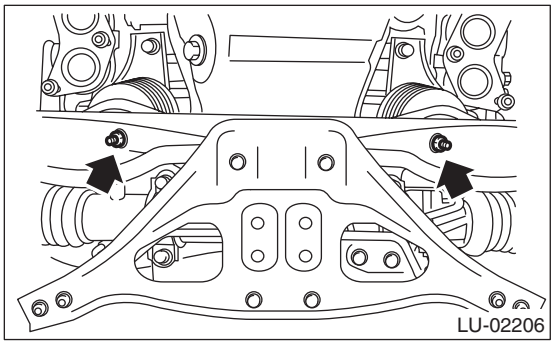

15) Remove the bolts which install oil pan on cylinder block with the engine raised up.
16) Insert the oil pan cutter blade into the gap between cylinder block and oil pan.

CAUTION:
Do not use a screwdriver or similar tool in place of oil pan cutter.
17) Remove the oil strainer.
18) Remove the baffle plate.

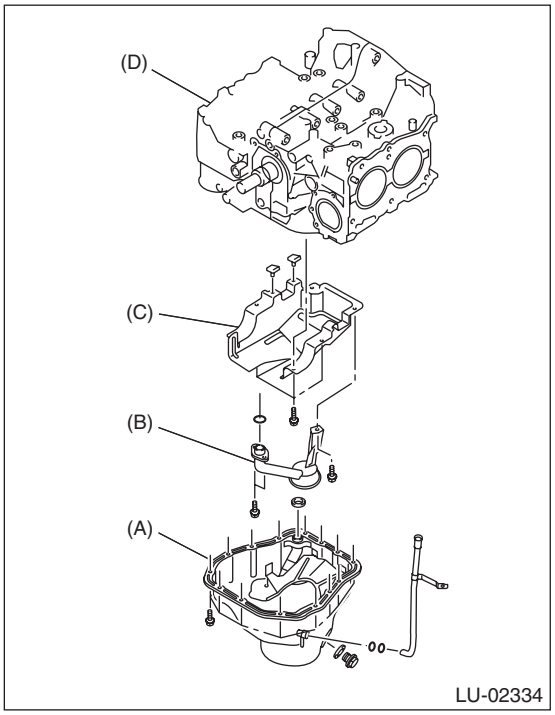

(A) Oil pan
(B) Oil strainer
(C) Baffle plate
(D) Cylinder block

B: INSTALLATION

NOTE:
Before installing the oil pan, clean the mating surface of oil pan and engine block.
1) Make sure that the seals (A) are installed securely on the baffle plate in a direction as shown in the figure below.

NOTE:
Use a new seal.

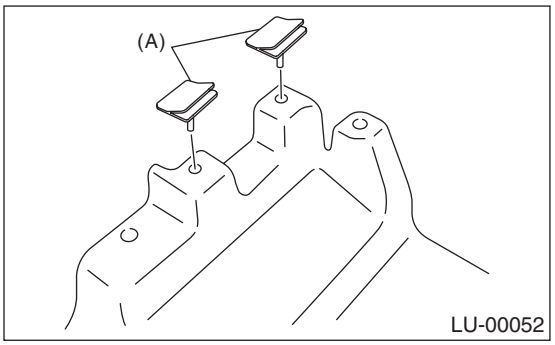

2) Install the baffle plate.

Tightening torque:
6.4 N·m (0.65 kgf-m, 4.7 ft-lb)
3) Install the oil strainer to the cylinder block.

NOTE:
Use new O-rings.

Tightening torque:
10 N·m (1.0 kgf-m, 7.2 ft-lb)
4) Tighten the oil strainer stay together with the baffle plate.

Tightening torque:
6.4 N·m (0.65 kgf-m, 4.7 ft-lb)
5) Apply liquid gasket to the mating surfaces, and install the oil pan.

NOTE:
Install within 5 min. after applying liquid gasket.

Liquid gasket:
THREE BOND 1207C (Part No. 004403012) or equivalent

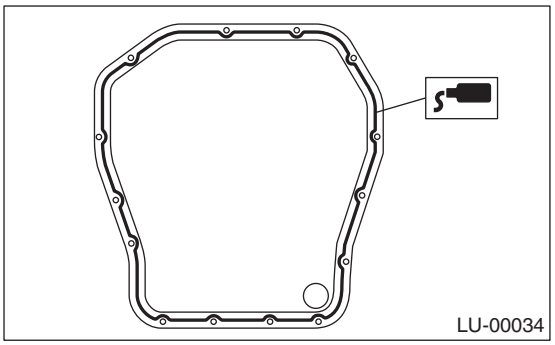

6) Tighten the bolts which secure the oil pan to the engine block.

Tightening torque:
T1: 5 N·m (0.5 kgf-m, 3.6 ft-lb)
T2: 6.4 N·m (0.65 kgf-m, 4.7 ft-lb)
T3: 10 N·m (1.0 kgf-m, 7.4 ft-lb)

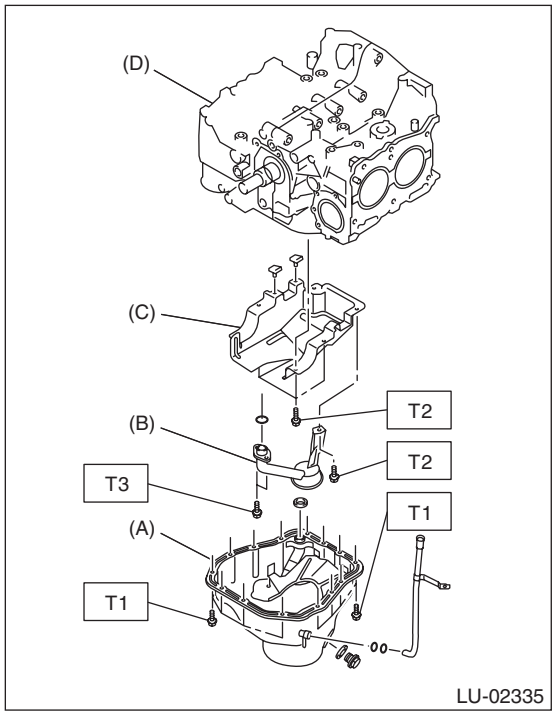

(A) Oil pan
(B) Oil strainer
(C) Baffle plate
(D) Cylinder block

7) Lower the engine onto front crossmember.
8) Tighten the nuts which install front cushion rubber onto front crossmember.

Tightening torque:
83 N·m (8.5 kgf-m, 61 ft-lb)

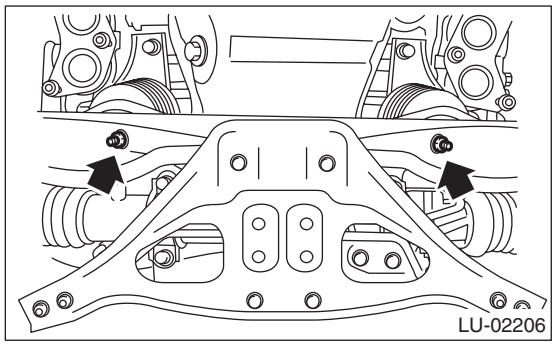

9) Install the front exhaust pipe. <Ref. to EX(H4DOTC)-8, INSTALLATION, Front Exhaust Pipe.>
10) Install the under cover.
11) Lower the vehicle.

CAUTION:
When lowering the vehicle, lower the lift-up device and wire ropes at the same time.

12) Remove the lifting device and wire ropes.

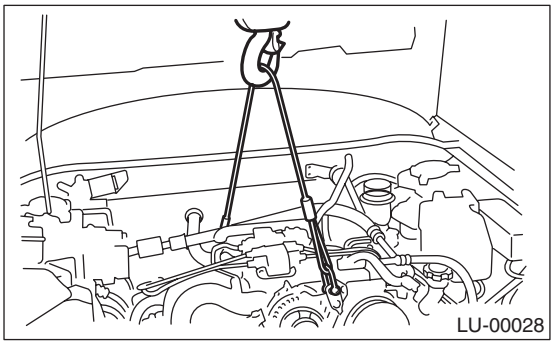

13) Install the pitching stopper.

Tightening torque:
T1: 50 N·m (5.1 kgf-m, 36.9 ft-lb)
T2: 58 N·m (5.9 kgf-m, 42.8 ft-lb)

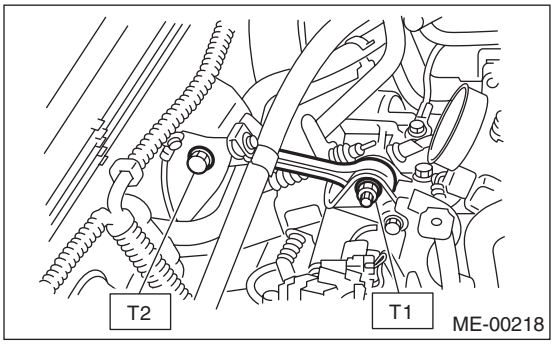

14) Install the radiator upper brackets.

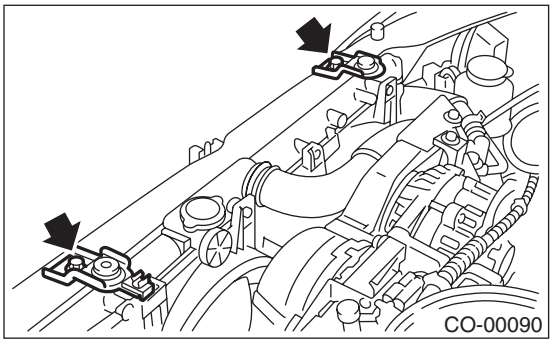

15) Install the intercooler. <Ref. to IN(H4DOTC)-14, INSTALLATION, Intercooler.>

16) Install the air intake boot and air cleaner upper cover.

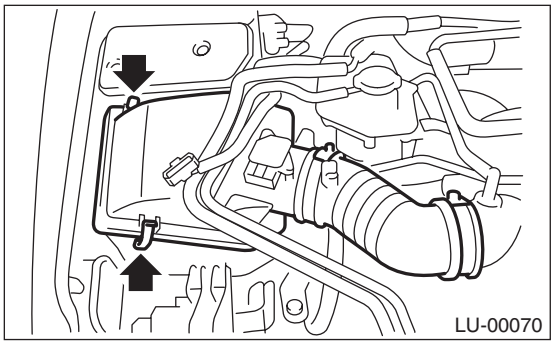

17) Connect the connector to the mass air flow and intake air temperature sensor.

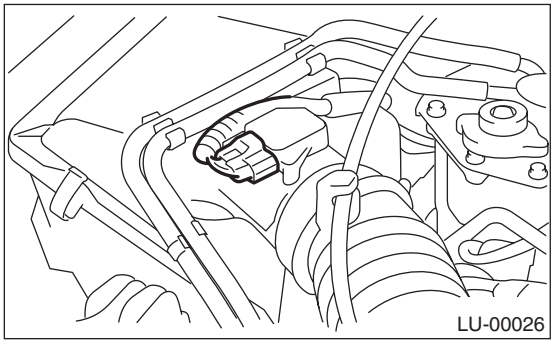

18) Install the front wheels.

Tightening torque:
100 N·m (10.2 kgf-m, 73.8 ft-lb)

19) Connect the ground cable to the battery.

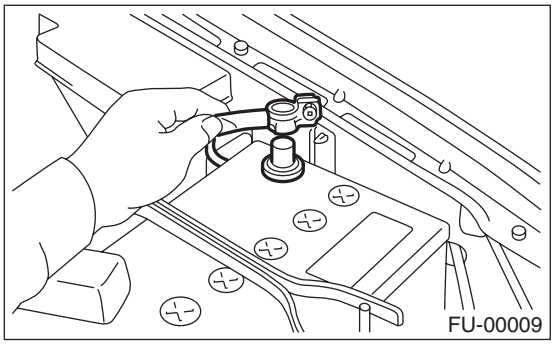

20) Refill the engine oil. <Ref. to LU(H4DOTC)-10, INSPECTION, Engine Oil.>

C: INSPECTION

Visually check that the oil pan, oil strainer, oil strainer stay and baffle plate are not damaged.